FAST CLOSING SYSTEM PIPE CLAMPS
(With Nuts & Rubber Profile)

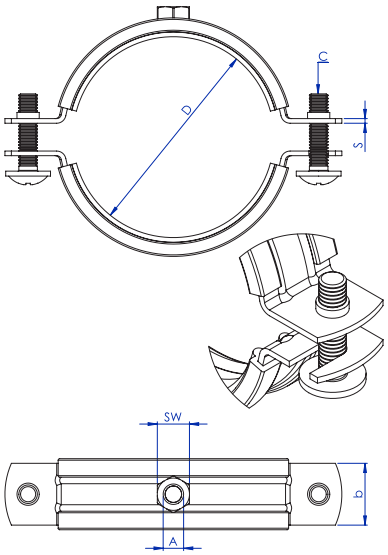

Technical Specifications

Product Code	Size (Inch)	Tighten Range D(mm)	Material	Material Dimension (bxs)	Hanging Nuts (A)	SW	Rubber	Recommended Load (kN)	Connection Screw (C)
FCS N - 01	1/4"	12-16	DIN EN 10130	1,20X20	M8	13	EPDM	1	M5X25
FCS N - 02	3/8"	15-19	DIN EN 10130	1,20X20	M8	13	EPDM	1	M5X25
FCS N - 03	1/2"	20-24	DIN EN 10130	1,20X20	M8	13	EPDM	1	M5X25
FCS N - 04	3/4"	26-30	DIN EN 10130	1,20X20	M8	13	EPDM	1	M5X25
FCS N - 05	1"	31-36	DIN EN 10130	1,20X20	M8	13	EPDM	1	M5X25
FCS N - 06	1 1/4"	40-46	DIN EN 10130	1,20X20	M8	13	EPDM	1	M5X25
FCS N - 07	1 1/2"	48-53	DIN EN 10130	1,20X20	M8	13	EPDM	1	M5X25
FCS N - 08	-	54-59	DIN EN 10130	1,20X20	M8	13	EPDM	1	M5X25
FCS N - 09	2"	60-64	DIN EN 10130	1,20X20	M8	13	EPDM	1	M5X25
FCS N - 10	2 1/2"	72-83	DIN EN 10130	2X25	M10	17	EPDM	1,5	M6X30
FCS N - 11	3"	87-92	DIN EN 10130	2X25	M10	17	EPDM	1,5	M6X30
FCS N - 12	-	95-103	DIN EN 10130	2X25	M10	17	EPDM	1,5	M6X30
FCS N - 13	4"	102-116	DIN EN 10130	2X25	M10	17	EPDM	1,5	M6X30
FCS N - 14	-	124-130	DIN EN 10130	2X25	M10	17	EPDM	2	M6X30
FCS N - 15	5"	132-141	DIN EN 10130	2X25	M10	17	EPDM	2	M6X30
FCS N - 16	6"	159-168	DIN EN 10130	2X25	M10	17	EPDM	2	M6X30

Features and Benefits

- Fast closing system installation for practitioners.
- Snap closure special fast closed system to prevent lover half part of clamps for falling upper half part during installation.
- Two-piece pie clamp with lining.
- Locking screw secured against loss.
- Better adaptation to different pipe cross sections due to two locking screws.
- Electro zinc plated (5-10 µm).
- Noise insulating lining EPDM rubber.
- Noise insulation according to DIN 4109.
- Locking screw: Flat head screw with combination recessed head.
- Fire behavior DIN 4102 class B2.

Rubber Profiles

- Extruded profile.
- Chlore - free
- Resistant to ozon UV, weather and sea water
- Temperature resistance from - 50C to 110C
- Shore A hardness 50±5

TELFORM
Kelepçe ve Yay San. Tic. A.Ş.

FAST CLOSING SYSTEM PIPE CLAMPS
(With Combi Nuts & Rubber Profile)

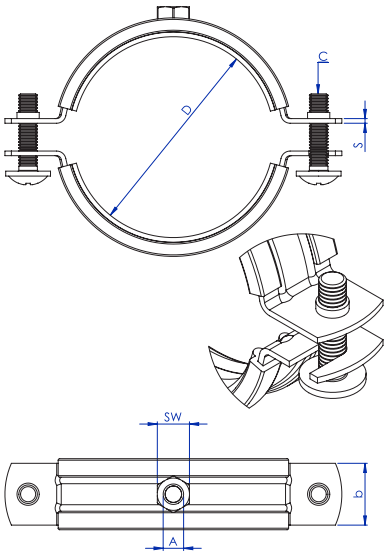

Technical Specifications

Product Code	Size (Inch)	Tighten Range D(mm)	Material	Material Dimension (bxs)	Hanging Nuts (A)	SW	Rubber	Recommended Load (kN)	Connection Screw (C)
FCS CN - 01	1/4"	12-16	DIN EN 10130	1,20X20	M8/M10	13	EPDM	1	M5X25
FCS CN - 02	3/8"	15-19	DIN EN 10130	1,20X20	M8/M10	13	EPDM	1	M5X25
FCS CN - 03	1/2"	20-24	DIN EN 10130	1,20X20	M8/M10	13	EPDM	1	M5X25
FCS CN - 04	3/4"	26-30	DIN EN 10130	1,20X20	M8/M10	13	EPDM	1	M5X25
FCS CN - 05	1"	31-36	DIN EN 10130	1,20X20	M8/M10	13	EPDM	1	M5X25
FCS CN - 06	1 1/4"	40-46	DIN EN 10130	1,20X20	M8/M10	13	EPDM	1	M5X25
FCS CN - 07	1 1/2"	48-53	DIN EN 10130	1,20X20	M8/M10	13	EPDM	1	M5X25
FCS CN - 08	-	54-59	DIN EN 10130	1,20X20	M8/M10	13	EPDM	1	M5X25
FCS CN - 09	2"	60-64	DIN EN 10130	1,20X20	M8/M10	13	EPDM	1	M5X25
FCS CN - 10	2 1/2"	72-83	DIN EN 10130	2X25	M8/M10	13	EPDM	1,5	M6X30
FCS CN - 11	3"	87-92	DIN EN 10130	2X25	M8/M10	13	EPDM	1,5	M6X30
FCS CN - 12	-	95-103	DIN EN 10130	2X25	M8/M10	13	EPDM	1,5	M6X30
FCS CN - 13	4"	102-116	DIN EN 10130	2X25	M8/M10	13	EPDM	1,5	M6X30
FCS CN - 14	-	124-130	DIN EN 10130	2X25	M8/M10	13	EPDM	2	M6X30
FCS CN - 15	5"	132-141	DIN EN 10130	2X25	M8/M10	13	EPDM	2	M6X30
FCS CN - 16	6"	159-168	DIN EN 10130	2X25	M8/M10	13	EPDM	2	M6X30

Features and Benefits

- Fast closing system installation for practitioners.
- Snap closure special fast closed system to prevent lover half part of clamps for falling upper half part during installation.
- Two-piece pie clamp with lining.
- Locking screw secured against loss.
- Better adaptation to different pipe cross sections due to two locking screws.
- Electro zinc plated (5-10 µm).
- Noise insulating lining EPDM rubber.
- Noise insulation according to DIN 4109.
- Locking screw: Flat head screw with combination recessed head.
- Fire behavior DIN 4102 class B2.
- Connecting nut with combination thread M8/M10.

Rubber Profiles

- Extruded profile.
- Chlore - free
- Resistant to ozon UV, weather and sea water
- Temperature resistance from - 50C to 110C
- Shore A hardness 50±5

2S MUFF PIPE CLAMPS
(1/2" Muff & Rubber Profile)

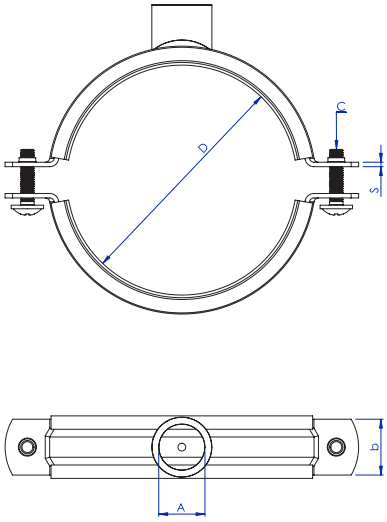

Technical Specifications

Product Code	Size (Inch)	Tighten Range D (mm)	Material	Material Dimension (bxs)	Hanging Nuts (A)	Rubber	Recommended Load (KN)	Connection Screw (C)
MUFF - 01	1/2"	20-24	DIN EN 10130	1,50X20	1/2"	EPDM	2	M6X25
MUFF - 02	3/4"	26-30	DIN EN 10130	1,50X20	1/2"	EPDM	2	M6X25
MUFF - 03	1"	31-36	DIN EN 10130	1,50X20	1/2"	EPDM	2	M6X25
MUFF - 04	1 1/4"	40-46	DIN EN 10130	1,50X20	1/2"	EPDM	2	M6X25
MUFF - 05	1 1/2"	48-53	DIN EN 10130	1,50X20	1/2"	EPDM	2	M6X25
MUFF - 06	-	54-59	DIN EN 10130	1,50X25	1/2"	EPDM	2	M6X30
MUFF - 07	2"	60-64	DIN EN 10130	1,50X25	1/2"	EPDM	2	M6X30
MUFF - 08	-	70-73	DIN EN 10130	1,50X25	1/2"	EPDM	2,5	M6X30
MUFF - 09	2 1/2"	72-83	DIN EN 10130	2,0X25	1/2"	EPDM	2,5	M6X30
MUFF - 10	3"	87-92	DIN EN 10130	2,0X25	1/2"	EPDM	2,5	M6X30
MUFF - 11	-	95-103	DIN EN 10130	2,0X25	1/2"	EPDM	2,5	M6X30
MUFF - 12	4	102-116	DIN EN 10130	2,0X25	1/2"	EPDM	2,5	M6X30
MUFF - 13	-	124-130	DIN EN 10130	2,5X25	1/2"	EPDM	3	M6X30
MUFF - 14	5"	132-141	DIN EN 10130	2,5X25	1/2"	EPDM	3	M6X30
MUFF - 15	6"	159-168	DIN EN 10130	2,5X25	1/2"	EPDM	3	M6X30

Features and Benefits

- The Inch ehreaded connecton nut allows for a pipe fixing with increased bending stress.
- Two-piece pipe clamps with lining.
- Locking screw secured against loss.
- Better adaptation to different pipe cross sections due two locking screws.
- Electro zinc plated (5-10 µm).
- Connection nut 1/2" resistance special welded.
- Noise insulating lining EPDM rubber.
- Noise insulation according to DIN 4109.
- Locking screw: Flat head screw with combination recessed head.
- Fire behavior DIN 4102 class B2.

Rubber Profiles

- Extruded profile.
- Chlore - free
- Resistant to ozon UV, weather and sea water
- Temperature resistance from - 50C to 110C
- Shore A hardness 50±5

2S PIPE CLAMPS
(With Welding Wood Screw & Rubber Profile)

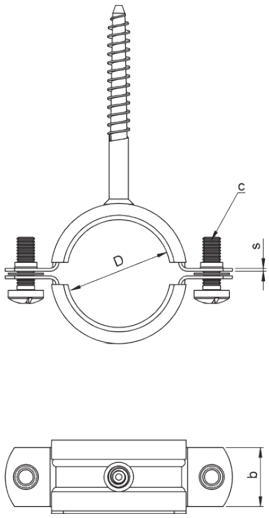

Technical Specifications

Product Code	Size (Inch)	Tighten Range D(mm)	Material Dimension (bxs)	H1xe	Recommended Load (kN)	Connection Screw (C)
2S SWS - 01	1/4"	12-15	1,5X20	7x70	0,8	M6x18
2S SWS - 02	3/8"	15-19	1,5X20	7x70	0,8	M6x18
2S SWS - 03	1/2"	20-24	1,5X20	7x70	0,8	M6x18
2S SWS - 04	3/4"	23-28	1,5X20	7x70	0,8	M6x18
2S SWS - 05	1"	31-36	1,5X20	7x70	0,8	M6x18
2S SWS - 06	11/4"	38-44	1,5X20	7x70	0,8	M6x18
2S SWS - 07	11/2"	44-50	1,5X20	7x70	0,8	M6x18
2S SWS - 08	-	54-58	1,5X20	7x70	0,8	M6x18
2S SWS - 09	2"	59-65	1,5X20	7x70	0,8	M6x18
2S SWS - 10	-	62-67	1,5X20	7x70	0,8	M6x18
2S SWS - 11	2 1/2"	74-80	2X25	7x70	0,8	M6x25

Features and Benefits

- Material: DIN EN 10130
- Two-piece pipe clamp with welded threaded shoulder woodscrew.
- Locking screw secured against loss.
- Better adaptation to different pipe cross sections due to two locking screws.
- Electro zinc plated (5-10 µm).
- Noise insulating lining EPDM rubber.
- Noise insulation according to DIN 4109.
- Locking screw: Flat head screw with combination recessed head.
- Fire behavior DIN 4102 class B2.

Rubber Profiles

- Extruded profile.
- Chlore - free
- Resistant to ozon UV, weather and sea water
- Temperature resistance from - 50C to 110C
- Shore A hardness 50±5

2S PIPE CLAMPS
(With Welding Wood Screw & Rubber Profile)

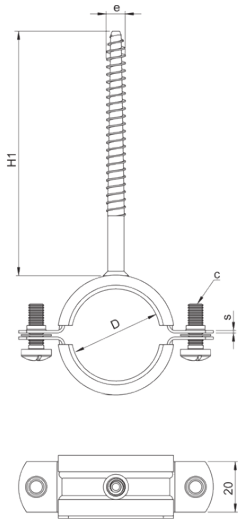

Technical Specifications

Product Code	Size (Inch)	Tighten Range D(mm)	Material Dimension (bxs)	H1xe	Recommended Load (kN)	Connection Screw (C)
2S BWS - 01	1/4"	12-15	1,5X20	7x100	0,8	M6x18
2S BWS - 02	3/8"	15-19	1,5X20	7x100	0,8	M6x18
2S BWS - 03	1/2"	20-24	1,5X20	7x100	0,8	M6x18
2S BWS - 04	3/4"	23-28	1,5X20	7x100	0,8	M6x18
2S BWS - 05	1"	31-36	1,5X20	7x100	0,8	M6x18
2S BWS - 06	11/4"	38-44	1,5X20	7x100	0,8	M6x18
2S BWS - 07	11/2"	44-50	1,5X20	7x100	0,8	M6x18
2S BWS - 08	-	54-58	1,5X20	7x100	0,8	M6x18
2S BWS - 09	2"	59-65	1,5X20	7x100	0,8	M6x18
2S BWS - 10	-	62-67	1,5X20	7x100	0,8	M6x18
2S BWS - 11	2 1/2"	74-80	2X25	7x100	0,8	M6x25

Features and Benefits

- Material: DIN EN 10130
- Two-piece pipe clamp with welded threaded shoulder woodscrew.
- Locking screw secured against loss.
- Better adaptation to different pipe cross sections due to two locking screws.
- Electro zinc plated (5-10 µm).
- Noise insulating lining EPDM rubber.
- Noise insulation according to DIN 4109.
- Locking screw: Flat head screw with combination recessed head.
- Fire behavior DIN 4102 class B2.

Rubber Profiles

- Extruded profile.
- Chlore - free
- Resistant to ozon UV, weather and sea water
- Temperature resistance from - 50C to 110C
- Shore A hardness 50±5

LIGHT HEAVY DUTY PIPE CLAMPS
(With Nuts & Rubber Profile)

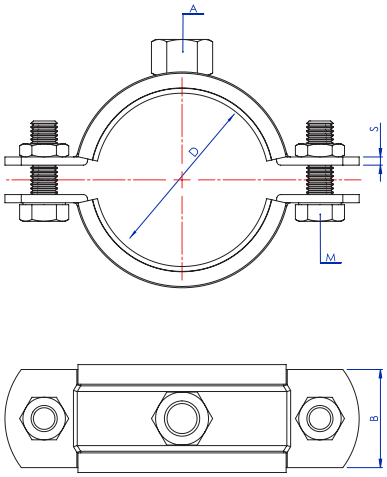

Technical Specifications

Product Code	Size (Inch)	Tighten Range D (mm)	Material	Material Dimension (bxs)	Hanging Nuts (A)	SW	Connection Bolt	Connection Screw (M)	Recommended Load (kN)
LHDN - 01	2 1/2"	74-80	DIN EN 10130	2x25	M10	17	M8x6,5	M8x25	2
LHDN - 02	3"	83-93	DIN EN 10130	2x25	M10	17	M8x6,5	M8x25	2
LHDN - 03	-	95-103	DIN EN 10130	2x25	M10	17	M8x6,5	M8x25	2
LHDN - 04	4"	108-118	DIN EN 10130	2x25	M10	17	M8x6,5	M8x25	2
LHDN - 05	-	121-127	DIN EN 10130	2x25	M10	17	M8x6,5	M8x25	2
LHDN - 06	5"	132-143	DIN EN 10130	2x25	M10	17	M8x6,5	M8x25	2
LHDN - 07	6"	159-169	DIN EN 10130	2x25	M10	17	M8x6,5	M8x25	2
LHDN - 08	-	198-202	DIN EN 10130	2x25	M10	17	M8x6,5	M8x25	2
LHDN - 09	-	210-215	DIN EN 10130	2x25	M10	17	M8x6,5	M8x25	2
LHDN - 10	8"	216-225	DIN EN 10130	2x25	M10	17	M8x6,5	M8x25	2
LHDN - 11	-	249-254	DIN EN 10130	2x25	M10	17	M8x6,5	M8x25	2

Features and Benefits

- Two part clamps with two locking bolts.
- The breaking load better nominal clamp.
- Better adaptation to different pipe cross sections due to two locking screws.
- Electro zinc plated (5-10 µm).
- Noise insulating lining EPDM rubber.
- Noise insulation according to DIN 4109.
- Locking screw: Flat head screw with combination recessed head.
- Fire behavior DIN 4102 class B2.

Rubber Profiles

- Extruded profile.
- Chlore - free
- Resistant to ozon UV, weather and sea water
- Temperature resistance from - 50C to 110C
- Shore A hardness 50±5

LIGHT HEAVY DUTY PIPE CLAMPS
(With Combi Nuts & Rubber Profile)

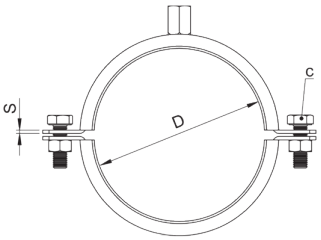

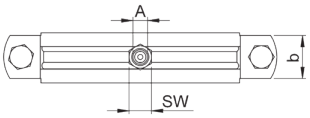

Technical Specifications

Product Code	Size (Inch)	Tighten Range D (mm)	Material	Material Dimension (bxs)	Hanging Nuts (A)	SW	Connection Bolt	Connection Screw (C)	Recommended Load (kN)
LHDCN - 01	2 1/2"	74-80	DIN EN 10130	2x25	M8/M10	13	M8x6,5	M8x25	1,5
LHDCN - 02	3"	83-93	DIN EN 10130	2x25	M8/M10	13	M8x6,5	M8x25	1,5
LHDCN - 03	-	95-103	DIN EN 10130	2x25	M8/M10	13	M8x6,5	M8x25	1,5
LHDCN - 04	4"	108-118	DIN EN 10130	2x25	M8/M10	13	M8x6,5	M8x25	1,5
LHDCN - 05	-	121-127	DIN EN 10130	2x25	M8/M10	13	M8x6,5	M8x25	1,5
LHDCN - 06	5"	132-143	DIN EN 10130	2x25	M8/M10	13	M8x6,5	M8x25	1,5
LHDCN - 07	6"	159-169	DIN EN 10130	2x25	M8/M10	13	M8x6,5	M8x25	1,5
LHDCN - 08	-	198-202	DIN EN 10130	2x25	M8/M10	13	M8x6,5	M8x25	1,5
LHDCN - 09	-	210-215	DIN EN 10130	2x25	M8/M10	13	M8x6,5	M8x25	1,5
LHDCN - 10	8"	216-225	DIN EN 10130	2x25	M8/M10	13	M8x6,5	M8x25	1,5
LHDCN - 10	-	249-254	DIN EN 10130	2x25	M8/M10	13	M8x6,5	M8x25	1,5

Features and Benefits

- Two part clamps with two locking bolts.
- The breaking load better nominal clamp.
- Better adaptation to different pipe cross sections due to two locking screws.
- Electro zinc plated (5-10 µm).
- Noise insulating lining EPDM rubber.
- Noise insulation according to DIN 4109.
- Locking screw: Flat head screw with combination recessed head.
- Fire behavior DIN 4102 class B2.
- Connecting nut with combination thread M8/M10.

Rubber Profiles

- Extruded profile.
- Chlore - free
- Resistant to ozon UV, weather and sea water
- Temperature resistance from - 50C to 110C
- Shore A hardness 50±5

HEAVY DUTY PIPE CLAMPS

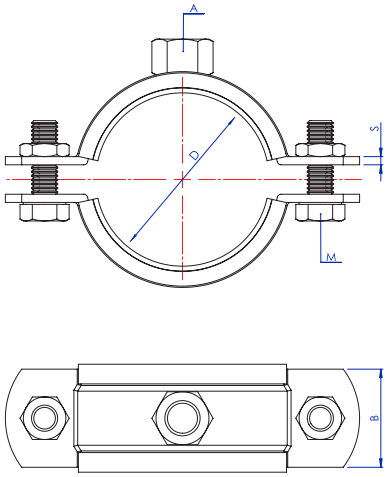

Technical Specifications

Product Code	Size (Inch)	Tighten Range D (mm)	Material Dimension (bxs)	Hanging Nuts (A)	Connection Screw (M)	Connection Bolt	Recommended Load (kN)
HDN - 01	1/2"	20-24	2,5x30	M12	M8X20	M8x6,5	3
HDN - 02	3/4"	23-28	2,5x30	M12	M8X20	M8x6,5	3
HDN - 03	1"	31-36	2,5x30	M12	M8X20	M8x6,5	3
HDN - 04	1 1/4"	38-44	2,5x30	M12	M8X20	M8x6,5	3
HDN - 05	1 1/2"	48-53	2,5x30	M12	M8X20	M8x6,5	3
HDN - 06	2"	59-66	2,5x30	M12	M8X20	M8x6,5	3
HDN - 07	2 1/2"	74-80	3x30	M12	M10X25	M10X8	3
HDN - 08	3"	87-94	3x30	M12	M10X25	M10X8	3
HDN - 09	4"	108-116	3x30	M12	M10X25	M10X8	3
HDN - 10	5"	135-143	4x40	M16	M12X30	M12X10	3
HDN - 11	6"	162-168	4x40	M16	M12X30	M12X10	3
HDN - 12	8"	206-220	4x40	M16	M12X30	M12X10	3
HDN - 13	10"	260-274	4x40	M16	M12X30	M12X10	3

Features and Benefits

- Two-pieces pipe clamps with lining.
- Heavy design.
- Heavy duty pipe clamps used for mouting of ppipe to the wall (vertical/horizontal) ceilings and floors.
- Electro zinc plated (5-10 µm).
- Noise insulating lining EPDM rubber.
- Noise insulation according to DIN 4109.
- Fire behavior DIN 4102 class B2.

Rubber Profiles

- Extruded profile.
- Chlore - free
- Resistant to ozon UV, weather and sea water
- Temperature resistance from - 50C to 110C
- Shore A hardness 50±5

BRACKET TYPE HEAVY DUTY PIPE CLAMPS

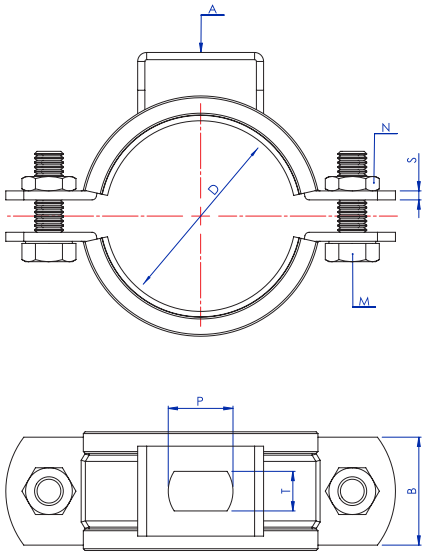

Technical Specifications

Product Code	Size (Inch)	Tighten Range D (mm)	Material Dimension (bxs)	PXT	A	Connection Screw (M)	Connection Bolk	Recommended Load (KN)
BTHD - 01	1/2"	20-24	2,5X30	18X11	3X30	M8X20	M8X6,5	3
BTHD - 02	3/4"	23-28	2,5X30	18X11	3X30	M8X20	M8X6,5	3
BTHD - 03	1"	31-36	2,5X30	18X11	3X30	M8X20	M8X6,5	3
BTHD - 04	1 1/4"	38-44	2,5X30	18X11	3X30	M8X20	M8X6,5	3
BTHD - 05	1 1/2"	48-53	2,5X30	18X11	3X30	M8X20	M8X6,5	3
BTHD - 06	2"	59-66	2,5X30	18X11	3X30	M8X20	M8X6,5	3
BTHD - 07	2 1/2"	74-80	3X30	18X11	3X30	M10X25	M10X8	3
BTHD - 08	3"	87-94	3X30	18X11	3X30	M10X25	M10X8	3
BTHD - 09	4"	108-116	3X30	18X11	3X30	M10X25	M10X8	3
BTHD - 10	5"	135-143	4X40	24X12	4X40	M12X30	M12X10	4
BTHD - 11	6"	162-168	4X40	24X12	4X40	M12X30	M12X10	4
BTHD - 12	8"	206-220	4X40	24X12	4X40	M12X30	M12X10	4
BTHD - 13	10"	260-274	4X40	24X12	4X40	M12X30	M12X10	4

Features and Benefits

- Two-pieces pipe clamps with lining.
- Bracket type Heavy design.
- Heavy dut pipe clamps usu for mounting of pipe the wall (vertical/horizontal) ceilings and floors.
- Electro zinc plated (5-10 µm).
- Noise insulating lining EPDM rubber.
- Noise insulation according to DIN 4109.
- Fire behavior DIN 4102 class B2.

Rubber Profiles

- Extruded profile.
- Chlore - free
- Resistant to ozon UV, weather and sea water
- Temperature resistance from - 50C to 110C
- Shore A hardness 50±5

2S PIPE CLAMPS SET PACKAGE
(With Nuts & Rubber Profile)

Technical Specifications

Product Code	Size (Inch)	Tighten Range (mm)	Material	Material Dimension (bxs)	Hanging Nuts (A)	SW	Rubber	Hanger Bolt	Plastic Plug	Recommended Load (kN)	Connection Screw (C)
2S SPN - 01	1/4"	12-16	DIN EN 10130	1,50X20	M8	13	EPDM	M8X80	10X50	1	M6X18
2S SPN - 02	3/8"	15-19	DIN EN 10130	1,50X20	M8	13	EPDM	M8X80	10X50	1	M6X18
2S SPN - 03	1/2"	20-24	DIN EN 10130	1,50X20	M8	13	EPDM	M8X80	10X50	1	M6X18
2S SPN - 04	3/4"	23-28	DIN EN 10130	1,50X20	M8	13	EPDM	M8X80	10X50	1	M6X18
2S SPN - 05	1"	31-36	DIN EN 10130	1,50X20	M8	13	EPDM	M8X80	10X50	1	M6X18
2S SPN - 06	1 1/4"	38-44	DIN EN 10130	1,50X20	M8	13	EPDM	M8X80	10X50	1	M6X18
2S SPN - 07	1 1/2"	44-50	DIN EN 10130	1,50X20	M8	13	EPDM	M8X80	10X50	1	M6X18
2S SPN - 08	-	54-58	DIN EN 10130	1,50X20	M8	13	EPDM	M8X80	10X50	1	M6X18
2S SPN - 09	2"	59-65	DIN EN 10130	1,50X20	M8	13	EPDM	M8X80	10X50	1	M6X18
2S SPN - 10	-	62-67	DIN EN 10130	1,50X20	M10	17	EPDM	M10X100	12X60	1,5	M6X25
2S SPN - 11	2 1/2"	74-80	DIN EN 10130	2,0X25	M10	17	EPDM	M10X100	12X60	1,5	M6X25
2S SPN - 12	3"	83-93	DIN EN 10130	2,0X25	M10	17	EPDM	M10X100	12X60	1,5	M6X25
2S SPN - 13	-	95-103	DIN EN 10130	2,0X25	M10	17	EPDM	M10X100	12X60	1,5	M6X25
2S SPN - 14	4"	108-118	DIN EN 10130	2,0X25	M10	17	EPDM	M10X100	12X60	2	M6X25
2S SPN - 15	-	121-127	DIN EN 10130	2,0X25	M10	17	EPDM	M10X100	12X60	2	M6X25
2S SPN - 16	5"	132-143	DIN EN 10130	2,0X25	M10	17	EPDM	M10X100	12X60	2	M6X25
2S SPN - 17	6"	159-169	DIN EN 10130	2,0X25	M10	17	EPDM	M10X100	12X60	2	M6X25
2S SPN - 18		198-202	DIN EN 10130	2,0X25	M10	17	EPDM	M10X100	12X60	2	M6X25
2S SPN - 19		210-215	DIN EN 10130	2,0X25	M10	17	EPDM	M10X100	12X60	2	M6X25
2S SPN - 20	8"	216-225	DIN EN 10130	2,0X25	M10	17	EPDM	M10X100	12X60	2	M6X25

Features and Benefits

- Two-piece pipe clamps with lining.
- Locking screw secured against loss.
- Better adaptation to different pipe cross sections due to two locking screws.
- Electro zinc plated (5-10 µm).
- Noise insulating lining EPDM rubber.
- Noise insulation according to DIN 4109.
- Locking screw: Flat head screw with combination recessed head.
- Fire behavior DIN 4102 class B2.
- Hanger Bolt and Plastic Plug should be used for fixing
- Easy and Safe Assembly.

Rubber Profiles

- Extruded profile.
- Chlore - free
- Resistant to ozon UV, weather and sea water
- Temperature resistance from - 50C to 110C
- Shore A hardness 50±5

2S PIPE CLAMPS SET PACKAGE
(With Combi Nuts & Rubber Profile)

Technical Specifications

Product Code	Size (Inch)	Tighten Range (mm)	Material	Material Dimension (bxs)	Hanging Nuts (A)	SW	Rubber	Hanger Bolt	Plastic Plug	Recommended Load (kN)	Connection Screw (C)
2S SPCN - 01	1/4"	12-15	DIN EN 10130	1,50X20	M8/M10	13	EPDM	M8X80	10X50	1	M6X18
2S SPCN - 02	3/8"	15-19	DIN EN 10130	1,50X20	M8/M10	13	EPDM	M8X80	10X50	1	M6X18
2S SPCN - 03	1/2"	20-24	DIN EN 10130	1,50X20	M8/M10	13	EPDM	M8X80	10X50	1	M6X18
2S SPCN - 04	3/4"	23-28	DIN EN 10130	1,50X20	M8/M10	13	EPDM	M8X80	10X50	1	M6X18
2S SPCN - 05	1"	31-36	DIN EN 10130	1,50X20	M8/M10	13	EPDM	M8X80	10X50	1	M6X18
2S SPCN - 06	1 1/4"	38-44	DIN EN 10130	1,50X20	M8/M10	13	EPDM	M8X80	10X50	1	M6X18
2S SPCN - 07	1 1/2"	44-50	DIN EN 10130	1,50X20	M8/M10	13	EPDM	M8X80	10X50	1	M6X18
2S SPCN - 08	-	54-58	DIN EN 10130	1,50X20	M8/M10	13	EPDM	M8X80	10X50	1	M6X18
2S SPCN - 09	2"	59-65	DIN EN 10130	1,50X20	M8/M10	13	EPDM	M8X80	10X50	1	M6X18
2S SPCN - 10	-	62-67	DIN EN 10130	1,50X20	M8/M10	17	EPDM	M10X100	12X60	1,5	M6X25
2S SPCN - 11	2 1/2"	74-80	DIN EN 10130	2,0X25	M8/M10	17	EPDM	M10X100	12X60	1,5	M6X25
2S SPCN - 12	3"	83-93	DIN EN 10130	2,0X25	M8/M10	17	EPDM	M10X100	12X60	1,5	M6X25
2S SPCN - 13	-	95-103	DIN EN 10130	2,0X25	M8/M10	17	EPDM	M10X100	12X60	1,5	M6X25
2S SPCN - 14	4"	108-118	DIN EN 10130	2,0X25	M8/M10	17	EPDM	M10X100	12X60	2	M6X25
2S SPCN - 15	-	121-127	DIN EN 10130	2,0X25	M8/M10	17	EPDM	M10X100	12X60	2	M6X25
2S SPCN - 16	5"	132-143	DIN EN 10130	2,0X25	M8/M10	17	EPDM	M10X100	12X60	2	M6X25
2S SPCN - 17	6"	159-169	DIN EN 10130	2,0X25	M8/M10	17	EPDM	M10X100	12X60	2	M6X25
2S SPCN - 18		198-202	DIN EN 10130	2,0X25	M8/M10	17	EPDM	M10X100	12X60	2	M6X25
2S SPCN - 19		210-215	DIN EN 10130	2,0X25	M8/M10	17	EPDM	M10X100	12X60	2	M6X25
2S SPCN - 20	8"	216-225	DIN EN 10130	2,0X25	M8/M10	17	EPDM	M10X100	12X60	2	M6X25

Features and Benefits

- Two-piece pipe clamps with lining.
- Locking screw secured against loss.
- Better adaptation to different pipe cross sections due to two locking screws.
- Electro zinc plated (5-10 µm).
- Noise insulating lining EPDM rubber.
- Noise insulation according to DIN 4109.
- Locking screw: Flat head screw with combination recessed head.
- Fire behavior DIN 4102 class B2.
- Hanger Bolt and Plastic Plug should be used for fixing
- Easy and Safe Assembly.

Rubber Profiles

- Extruded profile.
- Chlore - free
- Resistant to ozon UV, weather and sea water
- Temperature resistance from - 50C to 110C
- Shore A hardness 50±5

2S PIPE CLAMPS SET PACKAGE
(With Nuts & Without Rubber Profile)

Technical Specifications

Product Code	Size (Inch)	Tighten Range D(mm)	Material Dimension (bxs)	Hanging Nuts (A)	SW	Hanger Bolt	Plastic Plug	Breaking Load (kN)	Recommended Load (kN)	Connection Screw (C)
2S SPWORN - 01	3/8"	14-18	DIN EN 10130	1,5X20	M8	13	M8X80	10X50	1	M6X18
2S SPWORN - 02	1/2"	20-24	DIN EN 10130	1,5X20	M8	13	M8X80	10X50	1	M6X18
2S SPWORN - 03	3/4"	23-28	DIN EN 10130	1,5X20	M8	13	M8X80	10X50	1	M6X18
2S SPWORN - 04	1"	32-35	DIN EN 10130	1,5X20	M8	13	M8X80	10X50	1	M6X18
2S SPWORN - 05	1 1/4"	39-44	DIN EN 10130	1,5X20	M8	13	M8X80	10X50	1	M6X18
2S SPWORN - 06	1 1/2"	44-53	DIN EN 10130	1,5X20	M8	13	M8X80	10X50	1	M6X18
2S SPWORN - 07	2"	56-65	DIN EN 10130	1,5X20	M8	13	M8X80	10X50	1	M6X18
2S SPWORN - 08	-	62-69	DIN EN 10130	1,5X20	M8	13	M8X80	10X50	1	M6X18
2S SPWORN - 09	2 1/2	76-84	DIN EN 10130	2X25	M10	17	M10X100	12X60	1,5	M6X18
2S SPWORN - 10	3"	82-92	DIN EN 10130	2X25	M10	17	M10X100	12X60	1,5	M6X18
2S SPWORN - 11	-	95-103	DIN EN 10130	2X25	M10	17	M10X100	12X60	1,5	M6X25
2S SPWORN - 12	4"	107-115	DIN EN 10130	2X25	M10	17	M10X100	12X60	1,5	M6X25
2S SPWORN - 13	-	116-126	DIN EN 10130	2X25	M10	17	M10X100	12X60	2	M6X25
2S SPWORN - 14	5"	133-140	DIN EN 10130	2X25	M10	17	M10X100	12X60	2	M6X25
2S SPWORN - 15	6"	159-168	DIN EN 10130	2X25	M10	17	M10X100	12X60	2	M6X25
2S SPWORN - 16	8"	207-215	DIN EN 10130	2X25	M10	17	M10X100	12X60	2	M6X25

Features and Benefits

- Two-piece pipe clamps with lining.
- Locking screw secured against loss.
- Better adaptation to different pipe cross sections due to two locking screws.
- Electro zinc plated (5-10 µm).
- Locking screw: Flat head screw with combination recessed head.
- Fire behavior DIN 4102 class B2.
- Hanger Bolt and Plastic Plug should be used for fixing.
- Easy and Safe Assembly.

2S PIPE CLAMPS SET PACKAGE
(With Combi Nuts & Without Rubber Profile)

Technical Specifications

Product Code	Size (Inch)	Tighten Range D(mm)	Material Dimension (bxs)	Hanging Nuts (A)	SW	Hanger Bolt	Plastic Plug	Breaking Load (kN)	Recommended Load (kN)	Connection Screw (C)
2S SPWORCN - 01	3/8"	14-18	DIN EN 10130	1,5X20	M8/M10	13	M8X80	10X50	1	M6X18
2S SPWORCN - 02	1/2"	20-24	DIN EN 10130	1,5X20	M8/M10	13	M8X80	10X50	1	M6X18
2S SPWORCN - 03	3/4"	23-28	DIN EN 10130	1,5X20	M8/M10	13	M8X80	10X50	1	M6X18
2S SPWORCN - 04	1"	32-35	DIN EN 10130	1,5X20	M8/M10	13	M8X80	10X50	1	M6X18
2S SPWORCN - 05	1 1/4"	39-44	DIN EN 10130	1,5X20	M8/M10	13	M8X80	10X50	1	M6X18
2S SPWORCN - 06	1 1/2"	44-53	DIN EN 10130	1,5X20	M8/M10	13	M8X80	10X50	1	M6X18
2S SPWORCN - 07	2"	56-65	DIN EN 10130	1,5X20	M8/M10	13	M8X80	10X50	1	M6X18
2S SPWORCN - 08	-	62-69	DIN EN 10130	1,5X20	M8/M10	13	M8X80	10X50	1	M6X18
2S SPWORCN - 09	2 1/2	76-84	DIN EN 10130	2X25	M8/M10	13	M10X100	12X60	1,5	M6X18
2S SPWORCN - 10	3"	82-92	DIN EN 10130	2X25	M8/M10	13	M10X100	12X60	1,5	M6X18
2S SPWORCN - 11	-	95-103	DIN EN 10130	2X25	M8/M10	13	M10X100	12X60	1,5	M6X25
2S SPWORCN - 12	4"	107-115	DIN EN 10130	2X25	M8/M10	13	M10X100	12X60	1,5	M6X25
2S SPWORCN - 13	-	116-126	DIN EN 10130	2X25	M8/M10	13	M10X100	12X60	2	M6X25
2S SPWORCN - 14	5"	133-140	DIN EN 10130	2X25	M8/M10	13	M10X100	12X60	2	M6X25
2S SPWORCN - 15	6"	159-168	DIN EN 10130	2X25	M8/M10	13	M10X100	12X60	2	M6X25
2S SPWORCN - 16	8"	207-215	DIN EN 10130	2X25	M8/M10	13	M10X100	12X60	2	M6X25

Features and Benefits

- Two-piece pie clamp with lining.
- Locking screw secured against loss.
- Better adaptation to different pipe cross sections due to two locking screws.
- Electro zinc plated (5-10 µm).
- Locking screw: Flat head screw with combination recessed head.
- Connecting nut with combination thread M8/M10.
- Fire behavior DIN 4102 class B2.
- Hanger Bolt and Plastic Plug should be used for fixing.
- Easy and Safe Assembly.

CC E TYPE CLAMPS
(With Rubber Profile)

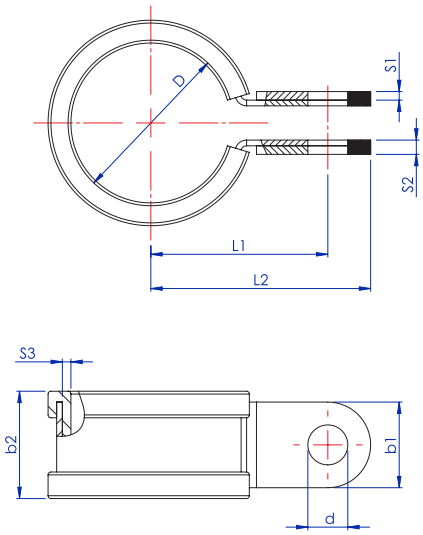

Technical Specifications

Material Width (b)		9	12	15		20		25	
Diameter D(mm)		Ø5 - Ø40	Ø5 - Ø80	Ø5 - Ø14	Ø15 - Ø100	Ø10 - Ø25	Ø26 - Ø130	Ø15 - Ø49	Ø50 - Ø150
Material Thickness S1	W1	0,40	0,50	0,60	0,80	0,80	1,00	1,00	1,25
	W3	0,40	0,50	0,60	0,80	0,80	0,80	1,00	1,00
	W4	0,40	0,50	0,60	0,80	0,80	0,80	1,00	1,00
Total Material Thickness S2	W1	1,40	1,50	1,60	1,80	2,30	2,50	2,50	2,75
	W3	1,40	1,50	1,60	1,60	2,30	2,30	2,50	2,50
	W4	1,40	1,50	1,60	1,60	2,30	2,30	2,50	2,50
Hole Diameter (d)		Ø4,30 (-0/+0,18)	Ø5,30 (-0/+0,18)	Ø6,40 (-0/+0,22)		Ø8,40 (-0/+0,22)		Ø10,50 (-0/+0,28)	
Rubber Thickness (S3)		1 ±0,35	1,2 ±0,35	1,50 ±0,35		2,0 ±0,35		3,0 ±0,35	
Rubber Width (b2)		13 ±0,80	15 ±0,80	19 ±1		25 ±1		31 ±1,3	

Features

- In accordance to DIN 3016.
- Primarily used for fixing hydraulic pipes, hoses and cables.
- The rubber profil absorbs vibration, jolts and also insulates.
- The band around fastening hole is reinforce.
- With rubber profile EPDM - Neopren - Silicone available.

CC B TYPE CLAMPS
(Without Rubber Profile)

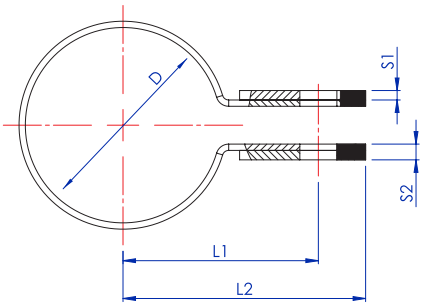

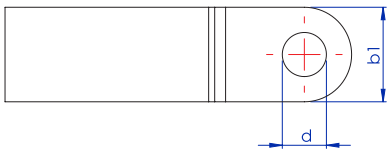

Technical Specifications

Material Width (b)		9	12	15		20		25	
Diameter D(mm)		Ø5 - Ø40	Ø5 - Ø80	Ø5 - Ø14	Ø15 - Ø100	Ø10 - Ø25	Ø26 - Ø130	Ø15 - Ø49	Ø50 - Ø150
Material Thickness S1	W1	0,40	0,50	0,60	0,80	0,80	1,00	1,00	1,25
	W3	0,40	0,50	0,60	0,80	0,80	0,80	1,00	1,00
	W4	0,40	0,50	0,60	0,80	0,80	0,80	1,00	1,00
Total Material Thickness S2	W1	1,40	1,50	1,60	1,80	2,30	2,50	2,50	2,75
	W3	1,40	1,50	1,60	1,60	2,30	2,30	2,50	2,50
	W4	1,40	1,50	1,60	1,60	2,30	2,30	2,50	2,50
Hole Diameter (d)		Ø4,30 (-0/+0,18)	Ø5,30 (-0/+0,18)	Ø6,40 (-0/+0,22)		Ø8,40 (-0/+0,22)		Ø10,50 (-0/+0,28)	

Features and Benefits

- Our connection clamps are DIN 3016 standart can be used for fixing hydraulic pipes, hoses and cable.
- The band around fastening hole is reinforced.

CC F TYPE CLAMPS
(With Rubber Profile)

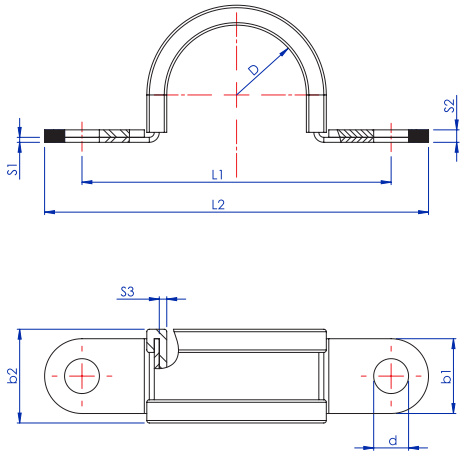

Technical Specifications

Material Width (b)		9	12	15		20		25	
Diameter D(mm)		Ø5 - Ø40	Ø5 - Ø80	Ø5 - Ø14	Ø15 - Ø100	Ø10 - Ø25	Ø26 - Ø130	Ø15 - Ø49	Ø50 - Ø150
Material Thickness S1	W1	0,40	0,50	0,60	0,80	0,80	1,00	1,00	1,25
	W3	0,40	0,50	0,60	0,80	0,80	0,80	1,00	1,00
	W4	0,40	0,50	0,60	0,80	0,80	0,80	1,00	1,00
Total Material Thickness S2	W1	1,40	1,50	1,60	1,80	2,30	2,50	2,50	2,75
	W3	1,40	1,50	1,60	1,60	2,30	2,30	2,50	2,50
	W4	1,40	1,50	1,60	1,60	2,30	2,30	2,50	2,50
Hole Diameter (d)		Ø4,30	Ø5,30	Ø6,40		Ø8,40		Ø10,50	
Hole Axis Distance - E		(D/2)+5,70 x2	(D/2)+8 x2	(D/2)+11,20 x2		(D/2)+14,50 x2		(D/2)+17,50 x2	
Rubber Thickness (S3)		1 ±0,35	1,2 ±0,35	1,50 ±0,35		2,0 ±0,35		3,0 ±0,35	
Rubber Width (b2)		13 ±0,8	15 ±0,8	19 ±1		25 ±1		31 ±1,3	

Features

- In accordance to DIN 3016.
- Primarily used for fixing hydraulic pipes, hoses and cables.
- The rubber profil absorbs vibration, jolts and also insulates.
- The band around fastening hole is reinforce.
- With rubber profile EPDM - Neopren - Silicone available.

CC C TYPE CLAMPS
(Without Rubber Profile)

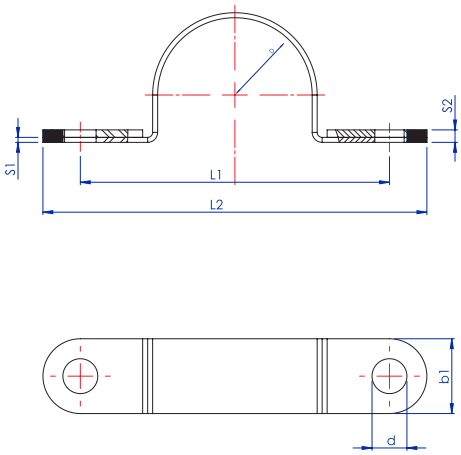

Technical Specifications

Material Width (b)		9	12	15		20		25	
Diameter D(mm)		Ø5 - Ø40	Ø5 - Ø80	Ø5 - Ø14	Ø15 - Ø100	Ø10 - Ø25	Ø26 - Ø130	Ø15 - Ø49	Ø50 - Ø150
Material Thickness S1	W1	0,40	0,50	0,60	0,80	0,80	1,00	1,00	1,25
	W3	0,40	0,50	0,60	0,80	0,80	0,80	1,00	1,00
	W4	0,40	0,50	0,60	0,80	0,80	0,80	1,00	1,00
Total Material Thickness S2	W1	1,40	1,50	1,60	1,80	2,30	2,50	2,50	2,75
	W3	1,40	1,50	1,60	1,60	2,30	2,30	2,50	2,50
	W4	1,40	1,50	1,60	1,60	2,30	2,30	2,50	2,50
Hole Diameter (d)		Ø4,30	Ø5,30	Ø6,40		Ø8,40		Ø10,50	
Hole Axis Distance - E		(D/2)+4,70 x2	(D/2)+6,80 x2	(D/2)+9,70 x2		(D/2)+12,50 x2		(D/2)+14,50 x2	

Features

- In accordance to DIN 3016
- Primarily used for fixing hydraulic pipes, hoses and cable.
- The band around fastening hole is reinforced.

CC A CLAMPS
(Without Rubber Profile)

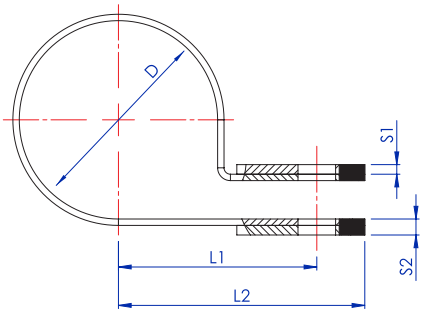

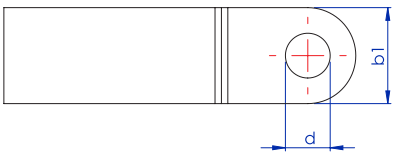

Technical Specifications

Material Width (b)		9	12	15		20		25	
Diameter D(mm)		Ø5 - Ø40	Ø5 - Ø80	Ø5 - Ø14	Ø15 - Ø100	Ø10 - Ø25	Ø26 - Ø130	Ø15 - Ø49	Ø50 - Ø150
Material Thickness S1	W1	0,40	0,40	0,60	0,80	0,80	1,00	1,00	1,25
	W3	0,40	0,40	0,60	0,60	0,80	0,80	1,00	1,00
	W4	0,40	0,40	0,60	0,60	0,80	0,80	1,00	1,00
Total Material Thickness S2	W1	1,40	1,50	1,60	1,80	1,80	2,50	2,50	2,75
	W3	1,40	1,50	1,60	1,60	1,60	2,30	2,50	2,50
	W4	1,40	1,50	1,60	1,60	1,60	2,30	2,50	2,50
Hole Diameter (d)		Ø4,30	Ø5,30	Ø6,40		Ø8,40		Ø10,50	
Distance - L1		(D/2)+4,7	(D/2)+6,8	(D/2)+9,7		(D/2)+12,5		(D/2)+14,5	
Distance - L2		(D/2)+9,2	(D/2)+13	(D/2)+17,2		(D/2)+22,5		(D/2)+27	

Features and Benefits

- Our connection clamps are DIN 3016 standard can be used for fixing hydraulic pies, hoses and cables.
- The band around fastening hole is reinforced.

CC D CLAMPS
(With Rubber Profile)

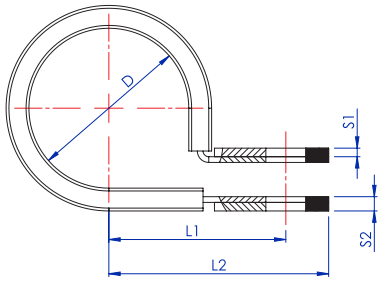

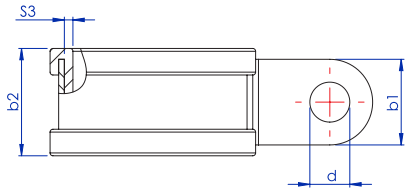

Technical Specifications

Material Width (b)		9	12	15		20		25	
Diameter D(mm)		Ø5 - Ø40	Ø5 - Ø80	Ø5 - Ø14	Ø15 - Ø100	Ø10 - Ø25	Ø26 - Ø130	Ø15 - Ø49	Ø50 - Ø150
Material Thickness S1	W1	0,40	0,40	0,60	0,80	0,80	1,00	1,00	1,25
	W3	0,40	0,40	0,60	0,60	0,80	0,80	1,00	1,00
	W4	0,40	0,40	0,60	0,60	0,80	0,80	1,00	1,00
Total Material Thickness S2	W1	1,40	1,50	1,60	1,80	2,30	2,50	2,50	2,75
	W3	1,40	1,50	1,60	1,60	2,30	2,30	2,50	2,50
	W4	1,40	1,50	1,60	1,60	2,30	2,30	2,50	2,50
Hole Diameter (d)		Ø4,30	Ø5,30	Ø6,40		Ø8,40		Ø10,50	
Distance - L1		(D/2)+5,7	(D/2)+8	(D/2)+11,2		(D/2)+14,5		(D/2)+17,5	
Distance - L2		(D/2)+10,2	(D/2)+14	(D/2)+18,7		(D/2)+24,5		(D/2)+30	
Rubber Thickness (S3)		1 > 0,35	1,2 > 0,35	1,5 > 0,35		2,0 > 0,35		3,0 > 0,35	
Rubber Width (b2)		13 > 0,8	15 > 0,8	19 > 1		25 > 1		31 > 1,3	

Features and Benefits

- Our connection clamps are DIN 3016 standard can be used for fixing hydraulic pipes, hoses and cable.
- The rubber profile is an excellent insulator and absorbs and absorbs jolts and vibrations.
- The band around fastening hole is reinforced.

HOSE HEAVY DUTY CLAMPS

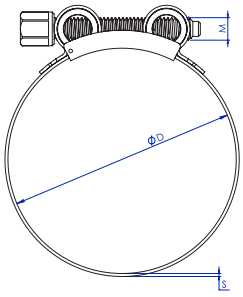

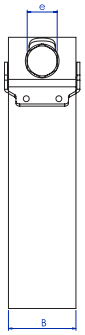

Technical Specifications

SIZE		TELFORM CODE			M (mm)	L (mm)	B (mm)	S (mm)
mm	INCH	W1	W2	W4				
17*19	11/16 -3/4	HHD-103	HHD-203	HHD-403	M6	8	18	0,8
19*21	3/4 - 13/16	HHD-104	HHD-204	HHD-404				
21*23	13/16 - 29/32	HHD-105	HHD-205	HHD-405				
23*25	29/32 - 1	HHD-106	HHD-206	HHD-406				
25*27	1 - 1 1/16	HHD-107	HHD-207	HHD-407				
27*29	1 1/16 - 1 5/32	HHD-108	HHD-208	HHD-408				
29*31	1 5/32 - 1 7/32	HHD-109	HHD-209	HHD-409				
31*34	1 7/32 - 1 5/16	HHD-110	HHD-210	HHD-410				
34*37	1 5/16 - 1 7/16	HHD-111	HHD-211	HHD-411	M7	10	20	1
37*40	1 7/16 - 1 9/16	HHD-112	HHD-212	HHD-412				
40*43	1 9/16 - 1 11/16	HHD-113	HHD-213	HHD-413				
43*47	1 11/16 - 1 7/8	HHD-114	HHD-214	HHD-414				
47*51	1 7/8 - 2	HHD-115	HHD-215	HHD-415				
51*55	2 - 2 5/32	HHD-116	HHD-216	HHD-416				
55*59	2 5/32 - 2 5/16	HHD-117	HHD-217	HHD-417				
59*63	2 5/16 - 2 1/2	HHD-118	HHD-218	HHD-418				
63*68	2 1/2 - 2 11/16	HHD-119	HHD-219	HHD-419				
68*73	2 11/16 - 2 7/8	HHD-120	HHD-220	HHD-420				
73*79	2 7/8 - 3 1/8	HHD-121	HHD-221	HHD-421				
79*85	3 1/8 - 3 11/32	HHD-122	HHD-222	HHD-422	M8	13	25	1,2
85*91	3 11/32 - 3 9/16	HHD-123	HHD-223	HHD-423				
91*97	3 9/16 - 3 13/16	HHD-124	HHD-224	HHD-424				
97*104	3 13/16 - 4 3/32	HHD-125	HHD-225	HHD-425				
104*112	4 3/32 - 4 3/8	HHD-126	HHD-226	HHD-426				
112*121	4 3/8 - 4 3/4	HHD-127	HHD-227	HHD-427				
121*130	4 3/4 - 5 1/8	HHD-128	HHD-228	HHD-428				
130*140	5 1/8 - 5 1/2	HHD-129	HHD-229	HHD-429				
140*150	5 1/2-5 7/8	HHD-130	HHD-230	HHD-430				
150*162	5 7/8 - 6 3/8	HHD-131	HHD-231	HHD-431	M10	15	28	1,5
162*174	6 3/8 - 6 7/8	HHD-132	HHD-232	HHD-432				
174*187	6 7/8 - 7 3/8	HHD-133	HHD-233	HHD-433				
187*200	7 3/8 - 7 7/8	HHD-134	HHD-234	HHD-434				
200*213	7 7/8 - 8 3/8	HHD-135	HHD-235	HHD-435				
213*226	8 3/8 - 8 7/8	HHD-136	HHD-236	HHD-436				
226*239	8 7/8 - 9 3/8	HHD-137	HHD-237	HHD-437				

Material

	BOLT	TAPE
W1	20 MnB4 - ZINC PLATED	DIN 1624 - ZINC PLATED
W2	20MnB4 - ZINC PLATED	AISI 430 STAINLESS STEEL
W4	AISI 304 STAINLESS STEEL	AISI 304 STAINLESS STEEL

STANDARD T-BOLT HOSE CLAMPS

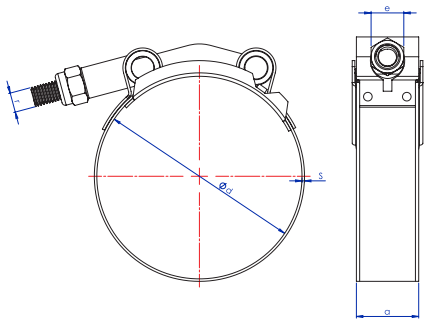

Technical Specifications

SIZE	TELFORM CODE		r (mm)	a (mm)	s (mm)	SIZE	TELFORM CODE		r (mm)	a (mm)	s (mm)
mm	W2	W4				mm	W2	W4			
32*36	STB - 201	STB - 401				101*110	STB - 224	STB - 424			
35*40	STB - 202	STB - 402				103*111	STB - 225	STB - 425			
38*43	STB - 203	STB - 403				105*113	STB - 226	STB - 426			
41*48	STB - 204	STB - 404				108*116	STB - 227	STB - 427			
44*51	STB - 205	STB - 405				114*122	STB - 228	STB - 428			
48*56	STB - 206	STB - 406				116*124	STB - 229	STB - 429			
51*59	STB - 207	STB - 407				121*129	STB - 230	STB - 430			
54*62	STB - 208	STB - 408				127*135	STB - 231	STB - 431			
57*65	STB - 209	STB - 409				133*141	STB - 232	STB - 432			
60*68	STB - 210	STB - 410				140*148	STB - 233	STB - 433			
63*72	STB - 211	STB - 411				146*154	STB - 234	STB - 434			
67*75	STB - 212	STB - 412	1/4"	19	0,8	152*160	STB - 235	STB - 435	1/4"	19	0,8
70*78	STB - 213	STB - 413				159*167	STB - 236	STB - 436			
73*81	STB - 214	STB - 414				165*173	STB - 237	STB - 437			
76*84	STB - 215	STB - 415				171*180	STB - 238	STB - 438			
77*85	STB - 216	STB - 416				178*186	STB - 239	STB - 439			
79*87	STB - 217	STB - 417				184*192	STB - 240	STB - 440			
82*91	STB - 218	STB - 418				190*198	STB - 241	STB - 441			
86*94	STB - 219	STB - 419				197*205	STB - 242	STB - 442			
89*97	STB - 220	STB - 420				203*211	STB - 243	STB - 443			
90*98	STB - 221	STB - 421				210*218	STB - 244	STB - 444			
92*100	STB - 222	STB - 422				216*224	STB - 245	STB - 445			
95*103	STB - 223	STB - 423									

Material

	BOLT	TAPE
W2	20 MnB4 - ZINC PLATED	AISI 430 STAINLESS STEEL
W4	20 MnB4 - ZINC PLATED	AISI 304 STAINLESS STEEL
W5	AISI 304 STAINLESS STEEL	AISI 304 STAINLESS STEEL

SPRING T-BOLT HOSE CLAMPS

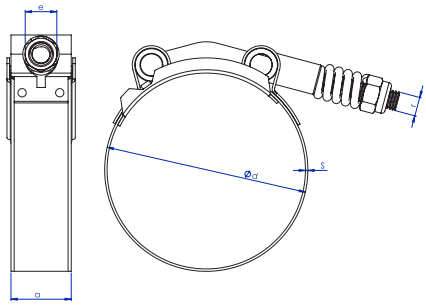

Technical Specifications

SIZE	TELFORM CODE		r (mm)	a (mm)	s (mm)	SIZE	TELFORM CODE		r (mm)	a (mm)	s (mm)
mm	W2	W4				mm	W2	W4			
54*62	STB - 201	STB - 401				108*116	STB - 220	STB - 420			
57*65	STB - 202	STB - 402				114*122	STB - 221	STB - 421			
60*68	STB - 203	STB - 403				116*124	STB - 222	STB - 422			
63*72	STB - 204	STB - 404				121*129	STB - 223	STB - 423			
67*75	STB - 205	STB - 405				127*135	STB - 224	STB - 424			
70*78	STB - 206	STB - 406				133*141	STB - 225	STB - 425			
73*81	STB - 207	STB - 407				140*148	STB - 226	STB - 426			
76*84	STB - 208	STB - 408				146*154	STB - 227	STB - 427			
77*85	STB - 209	STB - 409				152*160	STB - 228	STB - 428			
79*87	STB - 210	STB - 410				159*167	STB - 229	STB - 429			
82*91	STB - 211	STB - 411				165*173	STB - 230	STB - 430			
86*94	STB - 212	STB - 412	1/4"	19	0,8	171*180	STB - 231	STB - 431	1/4"	19	0,8
89*97	STB - 213	STB - 413				178*186	STB - 232	STB - 432			
90*98	STB - 214	STB - 414				184*192	STB - 233	STB - 433			
92*100	STB - 215	STB - 415				190*198	STB - 234	STB - 434			
95*103	STB - 216	STB - 416				197*205	STB - 235	STB - 435			
101*110	STB - 217	STB - 417				203*211	STB - 236	STB - 436			
103*111	STB - 218	STB - 418				210*218	STB - 237	STB - 437			
105*113	STB - 219	STB - 419				216*224	STB - 238	STB - 438			

Material

	BOLT	TAPE
W2	20 MnB4 - ZINC PLATED	AISI 430 STAINLESS STEEL
W4	20 MnB4 - ZINC PLATED	AISI 304 STAINLESS STEEL

U BOLT

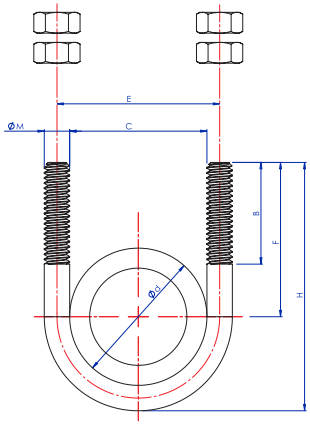

Telform Code	M	Q (")	Q d mm	B	F	H	C	E
UB - 01	M6	1/2"	21,3	30	32	60	24	30
UB - 02	M6	3/4"	26,9	30	39	60	30	36
UB - 03	M8	1"	33,7	30	44	70	36	44
UB - 04	M8	1 1/4"	42,4	40	49	80	46	54
UB - 05	M8	1 1/2"	48,3	50	56	90	52	60
UB - 06	M10	2"	60,3	50	58	100	64	74
UB - 07	M10	2 1/2"	76,1	50	71	120	78	88
UB - 08	M12	3"	88,9	60	81	140	94	106
UB - 09	M12	3 1/2"	101,6	65	85	150	106	118
UB - 10	M12	4"	114,3	65	89	160	118	130
UB - 11	M16	5"	139,7	65	115	200	146	158
UB - 12	M16	6"	165,1	90	118	220	172	188
UB - 13	M16	8"	219	90	142	270	224	240
UB - 14	M16	10"	273	100	169	324	278	294
UB - 15	M16	12"	324	100	200	380	328	344
UB - 16	M18	14"	355,6	100	215	413	360	378
UB - 17	M20	16"	406,4	120	242	470	415	435

ROD

THREADED ROD
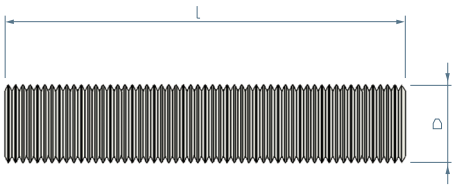
Telform Code	D	L (m)
GJ - 01	M6	1
GJ - 02	M8	1
GJ - 03	M10	1
GJ - 04	M12	1